FILTER TEBAS BATORY

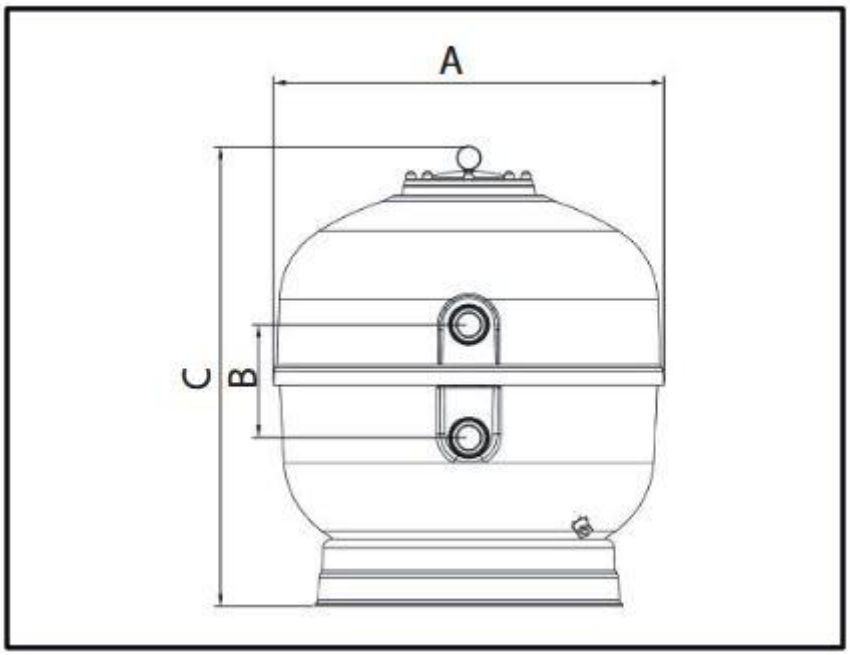

KOD	TYP	A	B	C
50000	500	Ø 525 mm	125 mm	760 mm
50002	600	Ø 619 mm	125 mm	808 mm
50004	750	Ø 793 mm	230 mm	936 mm
50006	900	Ø 930 mm	230 mm	1080 mm